Proflex - Istruzioni di installazione

Proflex - installation instructions

www.profittings.eu

1. Posizionare il riduttore dello sprinkler nel supporto riduttore e girare le viti di fissaggio il più possibile indietro.

2. Appoggiare la barra di supporto sul riduttore dello sprinkler e spingerla nel supporto del riduttore.

3. Spingere i morsetti di fissaggio della barra su entrambi i lati della barra di supporto, per il montaggio sul pannello del soffitto. Regolare la posizione dei morsetti sulla larghezza dei pannelli del soffitto e stringere le viti di fissaggio con un cacciavite o con una chiave a tubo 10.

4. Fissare la barra di supporto preassemblata sul pannello del soffitto usando i morsetti di fissaggio della barra. Regolare la posizione della barra di supporto fino a posizionare correttamente il riduttore dello sprinkler. Stringere bene le viti di fissaggio dei morsetti, con un cacciavite o una chiave a tubo 10.

5. Rimuovere la protezione in PVC da entrambi i lati del tubo flessibile per poter montare il nipplo di collegamento e riduttore dello sprinkler. Dopo aver levato la protezione, sarà visibile la guarnizione in gomma che fornirà la tenuta necessaria sul tubo flessibile.

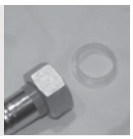

6. Su un lato il nipplo di collegamento ha una filettatura 1" BSPT per poterlo collegare allo sprinkler a T o al raccordo filettato a vite. L'altro lato del nipplo di collegamento andrà montato sul tubo flessibile.

7. Fornire la tenuta necessaria nella filettatura 1" BSPT del nipplo di collegamento (usando canapa o grasso misto a canapa).

8. Avvitare il nipplo di collegamento nello sprinkler a T o nel raccordo filettato a vite con una chiave per tubi, fino a stringerlo fermamente.

9. Controllare la direzione del flusso segnata sul tubo flessibile. Il riduttore dello sprinkler deve essere montato in direzione della freccia, e il nipplo di collegamento sull'altro lato del tubo flessibile.

10. Avvitare il dado sul tubo flessibile sul nipplo di collegamento e stringerlo a mano.

11. Piegare il tubo flessibile (raggio di curvatura minimo 175 mm) e collegare l'altra estremità del tubo flessibile al riduttore dello sprinkler.

12. Regolare l'altezza del riduttore dello sprinkler nel supporto del riduttore a seconda del modello di sprinkler scelto, quindi e stringere bene le viti di fissaggio sul morsetto del riduttore, con un cacciavite o una chiave a tubo.

13. I dadi di collegamento su entrambi i lati del tubo flessibile possono ora essere stretti a fondo, con una chiave regolabile.

14. Garantire allo spinkler la tenuta necessaria, usando per esempio Teflon, Teflon liquido o altri materiali sigillanti adeguati. Stringere lo sprinkler con la chiave per sprinkler appropriata (relativa al fornitore dello sprinkler) nel riduttore dello sprinkler.

Profit Europe NV • Industrielaan 20 • 9320 Erembodegem • Belgium • Tel: 0032/53 64 60 80 • Fax: 0032/53 64 60 86 • info@profittings.eu

Proflex - Istruzioni di installazione

Proflex - installation instructions

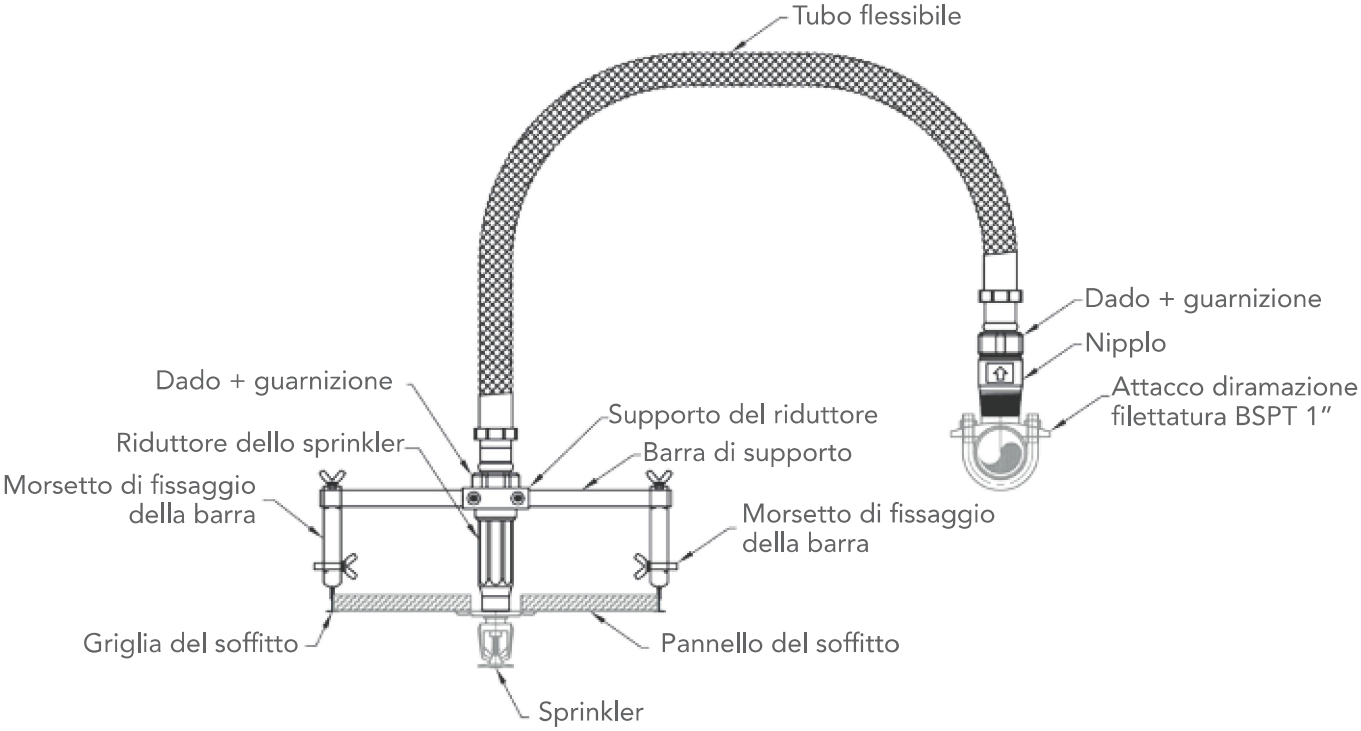

Proflex - Istruzioni di installazione

Proflex - installation instructions

www.profittings.eu

1. Position the sprinkler reducer in the reducer bracket and turn the fixing screws back as far as possible.

2. Place the support bar next to the sprinkler reducer and push it into the reducer bracket.

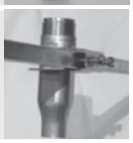

3. Push the bar fixing clamps over both sides of the support bar for mounting onto the ceiling panel. Adjust the position of the clamps to the width of the ceiling panels and tighten the fixing screws with a screwdriver or a socket wrench 10.

4. Fasten the pre-assembled support bar on the ceiling panel using the bar fixing clamps. Adjust the position of the support bar until the sprinkler reducer is correctly positioned. Tighten the fixing screws on the clamps firmly using a screwdriver or a socket wrench 10.

5. Remove the PVC protection from both sides of the flexible hose so that the connection nipple and the sprinkler reducer can be attached. Once this protection is removed you can see the rubber gasket which shall provide the necessary seal on the flexible hose.

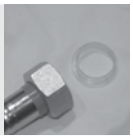

6. On one side, the connection nipple has a 1" BSPT thread to be connected to a sprinkler tee or to a threaded screw fitting. The other side of the connection nipple is for attaching the flexible hose.

7. Provide the necessary seal on the 1" BSPT thread of the connection nipple (using flax or flax grease).

8. Screw the connection nipple into the sprinkler tee or threaded screw fitting with a pipe wrench until it is firmly tightened.

9. Check the flow direction that is marked on the flexible hose. The sprinkler reducer must be assembled in the direction of the arrow, and the connection nipple on the other side of the flexible hose.

10. Screw the nut of the flexible hose onto the connection nipple and tighten it finger-tight.

11. Bend the flexible hose (minimum bending radius 175mm) and connect the other end of the flexible hose to the sprinkler reducer.

12. Adjust the height of the sprinkler reducer in the reducer bracket according to the selected sprinkler model and turn the fixing screws on the reducer bracket tight with a screwdriver or a socket wrench.

13. The connection nuts on both sides of the flexible hose can now be tightened firmly using an adjustable wrench.

14. Give the sprinkler the necessary seal using, for example, Teflon, liquid Teflon or another suitable sealing material. Tighten the sprinkler with the appropriate sprinkler wrench (depending on the sprinkler supplier) into the sprinkler reducer.

Profit Europe NV • Industrielaan 20 • 9320 Erembodegem • Belgium • Tel: 0032/53 64 60 80 • Fax: 0032/53 64 60 86 • info@profittings.eu

Proflex - Istruzioni di installazione

Proflex - installation instructions

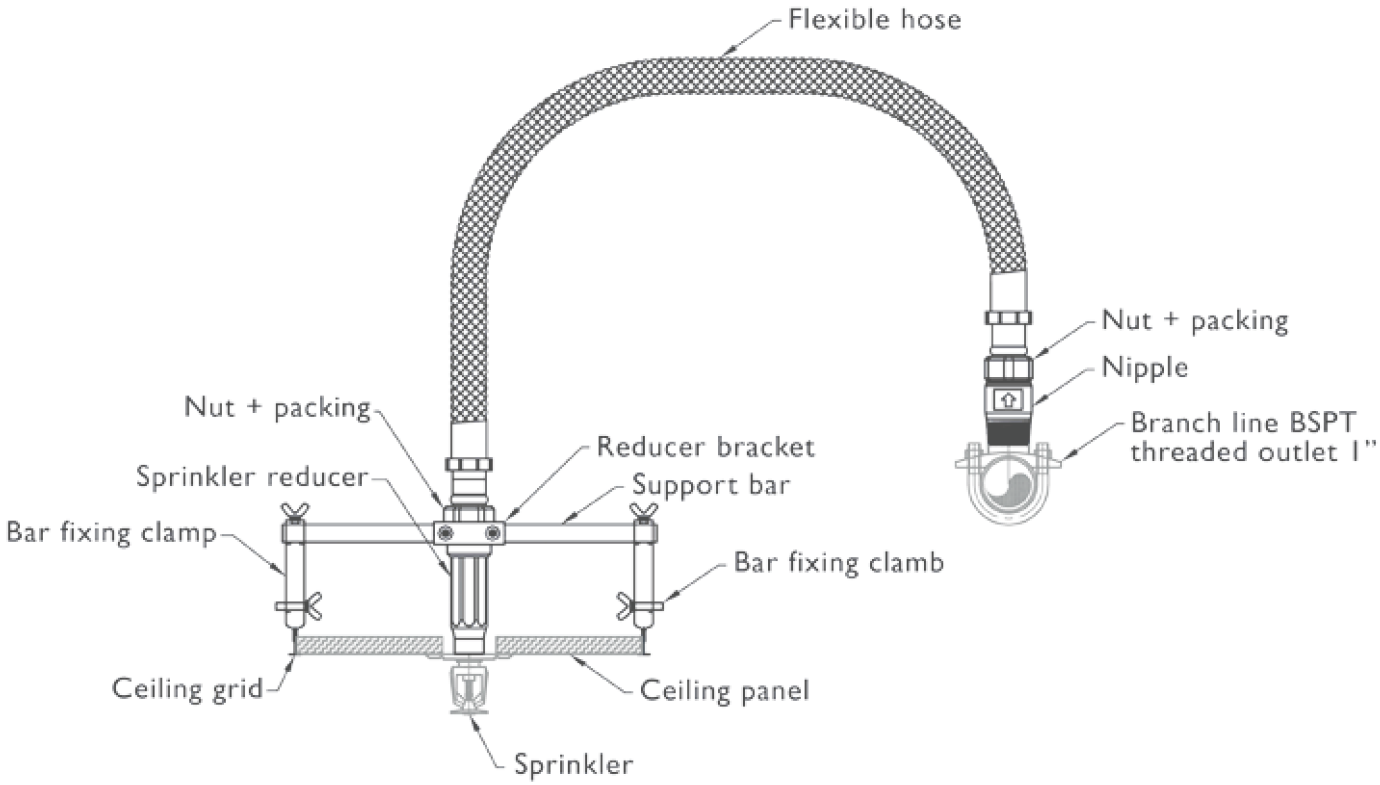

Flexarm® FL 1

VIROTEC®-Flexarm® auf den Punkt gedreht
Der VIROTEC®-Flexarm® FL 1 ist eine längenverstellbare Rohrauswinklung für den Einsatz in ortsfesten Wasserlöschanlagen. Der Flexarm® wurde speziell für den Einsatz im Bereich von abgehängten Decken konzipiert, wo bei herkömmlicher Arbeitsweise ein hohes Maß an Anpassungen notwendig ist. Er ermöglicht eine schnelle, einfache und genaue horizontale Anpassung auf jeden Punkt im Bereich einer Deckenplatte mit Rastermaß von 625 mm. Der Typ FL 1 ist vorgesehen für die Montage oberhalb der Strangrohrleitung.

VIROTEC®-Flexarm® turned to the point
The VIROTEC®-Flexarm® FL 1 is a length adjustable arm over pipe for use in fixed, stationary water systems for extinguishing fires. The Flexarm® was specially designed for use in the area of suspended ceilings, where conventional working methods require a large number of adjustments. It enables fast, easy and precise horizontal adjustment to each point within the area of a ceiling panel with a grid dimension of 625 mm. The type FL 1 is intended for mounting abouve the branch line pipe.

Montageanweisung
1. Anschlussgewinde 1” am Anschlussstück (Pos. 3) eindichten.
   Achtung: Bei Verwendung von flüssigen Dichtmitteln die Verarbeitungsvorschriften beachten.
2. Anschlussstück (Pos. 3) einschrauben und mit Rohrzange fest anziehen.
3. Flexarm® in die gewünschte Position bringen und diese durch leichtes Anziehen (ca. 5 Nm) der Gewindestifte (Pos. 5) sichern.
4. Ein Nachjustieren, auch unter Druck, ist jederzeit möglich:
   – Gewindestifte (Pos. 5) lösen
   – Gewünschte Position einstellen
   – Gewindestifte (Pos. 5) anziehen
   Achtung: Die Sicherungsstifte (Pos. 4) auf der Innenseite dürfen nicht gelöst oder raus gedreht werden da sonst jegliche Gewährleistungsansprüche erlöschen.

Mounting instruction
1. Seal the 1” connecting thread at the connector (Item 3).
   Important: *When using liquid sealants, note the sealant instructions for use.*
2. Screw in connector (Item 3) and tight on firm with pipe wrench.
3. Place the Flexarm® in the required position and secure it by ligth tightening (approx 5 Nm) the setscrews (Item 5).
4. Subsequent adjustment is possible at any time, even when pressurised:
   – Undo setscrews (Item 5)
   – Adjust to required position
   – Tighten setscrews (Item 5)
   Important: *The locking pins (Item 4) on the inside must not be loosened or twisted out as otherwise any warranty claims are cancelled.*

Flexarm® FL 1

Flexarm® FL 1 (Montage über dem Rohr)
Flexarm® FL 1 (Mounting above the pipe)

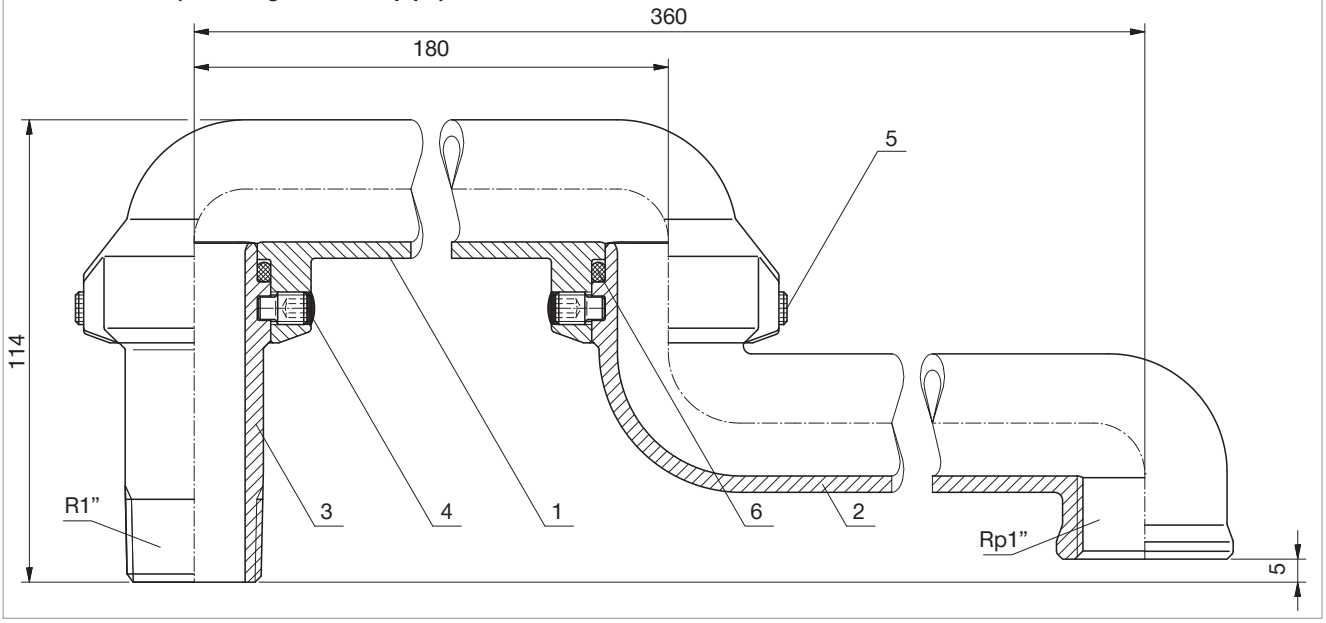

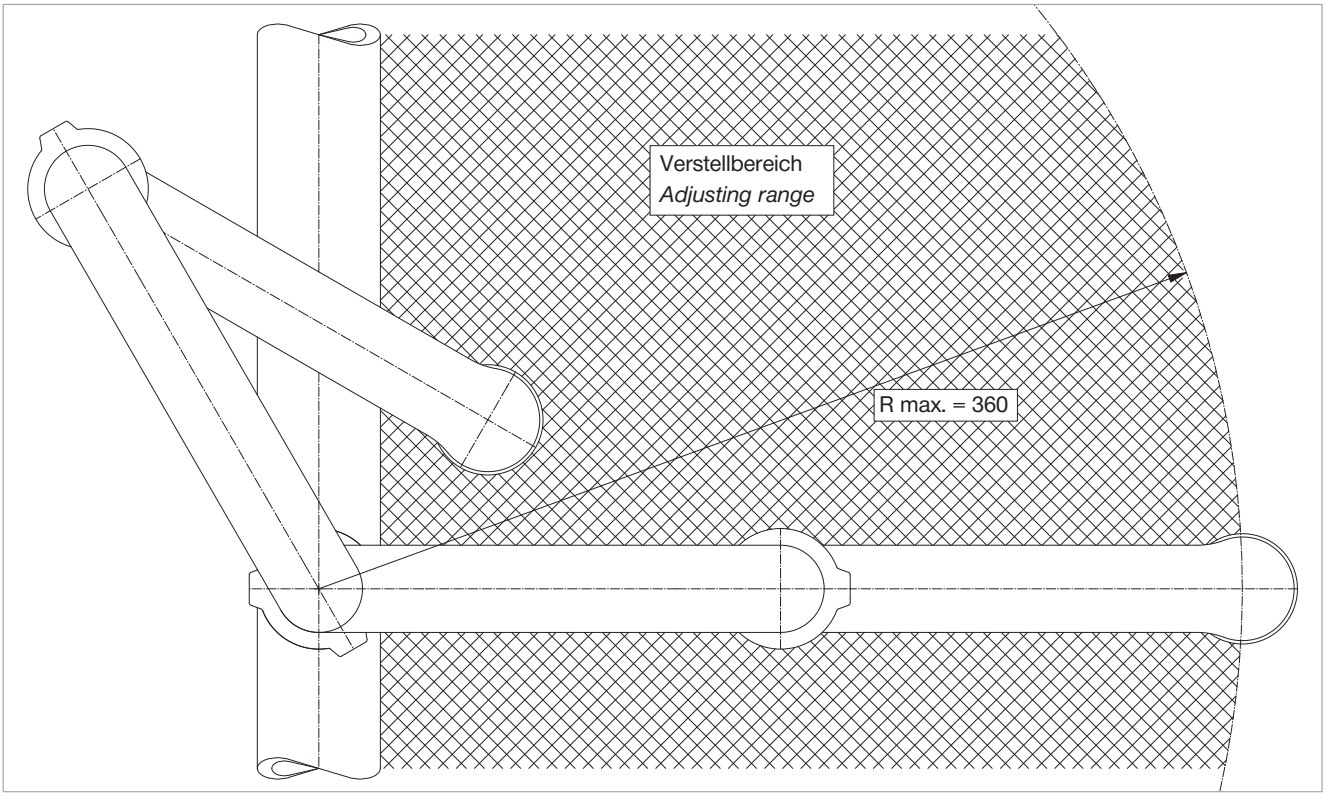

Flexarm® FL 2

VIROTEC®-Flexarm® auf den Punkt gedreht
Der VIROTEC®-Flexarm® FL 2 ist eine längenverstellbare Rohrauswinklung unter Verwendung einer Kombination von gegossenen Rohrformteilen, für den Einsatz in ortsfesten Wasserlöschanlagen. Der Flexarm® wurde speziell für den Einsatz im Bereich von abgehängten Decken konzipiert, wo bei herkömmlicher Arbeitsweise ein hohes Maß an Anpassungen notwendig ist. Er ermöglicht eine schnelle, einfache und genaue horizontale Anpassung auf jeden Punkt im Bereich einer Deckenplatte mit Rastermaß von 625 mm. Der Typ FL 2 ist vorgesehen für die Montage unterhalb der Strangrohrleitung.

VIROTEC®-Flexarm® turned to the point
The VIROTEC®-Flexarm® FL 2 is a length adjustable arm over pipe using a combination of cast shaped pipe parts, for use in fixed, stationary water systems for extinguishing fires. The Flexarm® was specially designed for use in the area of suspended ceilings, where conventional working methods require a large number of adjustments. It enables fast, easy and precise horizontal adjustment to each point within the area of a ceiling panel with a grid dimension of 625 mm. The type FL 2 is intended for mounting below the branch line pipe.

Montageanweisung
1. Anschlussgewinde 1” am Anschlussstück (Pos. 3) eindichten.
   Achtung: Bei Verwendung von flüssigen Dichtmitteln die Verarbeitungsvorschriften des Dichtmittelherstellers beachten.
2. Anschlussstück (Pos. 3) einschrauben und mit Rohrzange fest anziehen.
3. Flexarm® in die gewünschte Position bringen und diese durch leichtes Anziehen (ca. 5 Nm) der Gewindestifte (Pos. 5) sichern.
4. Ein Nachjustieren, auch unter Druck, ist jederzeit möglich:
   – Gewindestifte lösen (Pos. 5)
   – Gewünschte Position einstellen
   – Gewindestifte anziehen (Pos. 5)
   Achtung: Die Sicherungsstifte (Pos. 4) auf der Innenseite dürfen nicht gelöst oder raus gedreht werden da sonst jegliche Gewährleistungsansprüche erlöschen.

Mounting instruction
1. Seal the 1” connecting thread at the connector (Item 3).
   Important: *When using liquid sealants, note the sealant instructions for use.*
2. Screw in connector (Item 3) and tight on firm with pipe wrench.
3. Place the Flexarm® in the required position and secure it by light tightening (approx 5 Nm) the setscrews (Item 5).
4. Subsequent adjustment is possible at any time, even when pressurised:
   – Undo setscrews (Item 5)
   – Adjust to required position
   – Tighten setscrews (Item 5)
   Important: *The locking pins (Item 4) on the inside must not be loosened or twisted out as otherwise any warranty claims are cancelled.*

Flexarm® FL 2

Flexarm® FL 2 (Montage unter dem Rohr)
Flexarm® FL 2 (Mounting below the pipe)

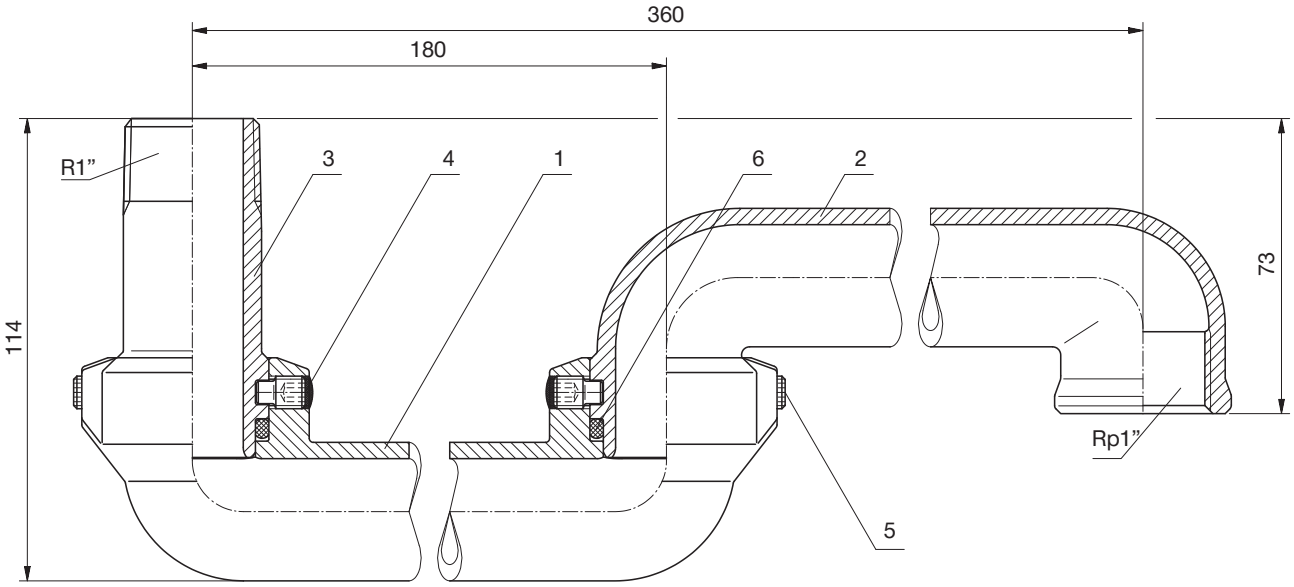

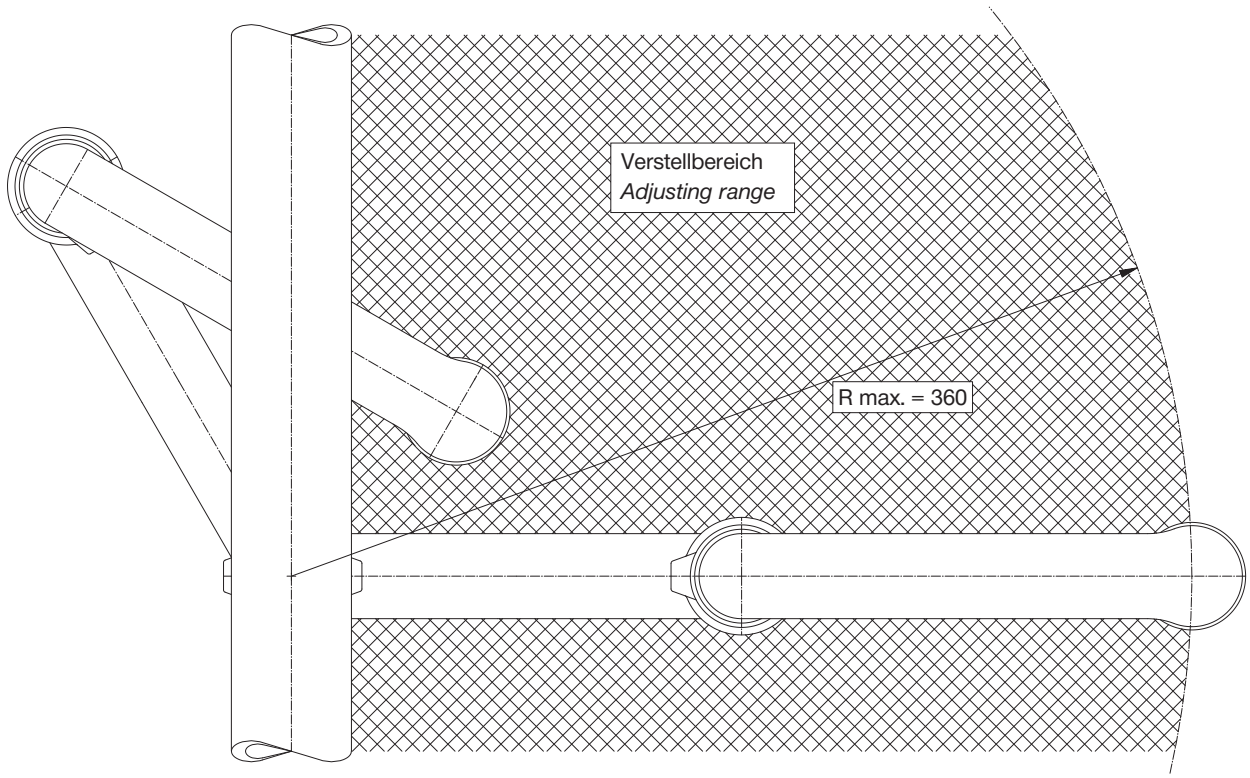

VIROTEC®-Telerohr nach Maß
Das VIROTEC®-Telerohr VS ist ein längenverstellbares Fallrohr für den Einsatz in ortsfesten Wasserlöschanlagen. Es ermöglicht die genaue Anpassung der Sprinklerköpfe an die Lage einer abgehängten Decke in vertikaler Richtung. Die Ausgangslänge kann, durch Kürzen des Außenrohres, an die Einbausituation angepasst werden. Die Längenverstellung kann nach vollständiger Montage des Rohrnetzes erfolgen. Die Montagezeit wird erheblich verkürzt.

VIROTEC®-telescope pipe length tailor-made
The VIROTEC®-telescope pipe VS is an adjustable drop nipple for use in fixed, stationary water systems for extinguishing fires. It enables precise adjustment of the sprinkler heads to the location of a suspended ceiling in a vertical direction. The initial length can be adjusted to the installed situation by shortening the outer pipe. The longitudinal adjustment can take place after the pipe network has been completely installed. The installation time is considerably reduced.

Montageanweisung
1. Einbaulänge ermitteln und Telerohr, wenn erforderlich, am Außenrohr kürzen (nur Modelle VS 0.3 und VS 0.4).
   Achtung: Markierung für die kleinste Länge (160 mm) beachten.
2. Gegebenenfalls Außengewinde R1” schneiden.
3. Gewinde eindichten und Bauteil montieren.
4. Länge einstellen, Verstellung erfolgt durch Schrauben (auch unter Druck möglich).
   Achtung: Das Stellrohr darf nur bis zum Anfang des Außenrohres eingeschraubt werden!

Mounting instruction
1. *Determine the installed length and if necessary shorten the tele pipe at the outer pipe (only VS 0.3 and VS 0.4 models).*
   Important: *Note the marking for the smallest length (160 mm).*
2. *If necessary cut outer thread R1”.*
3. *Seal the thread and fit the component.*
4. *Adjust length, adjustment made by screwing (also possible under pressure).*
   Important: *The adjusting pipe may only be screwed in up to the start of the outer pipe!*

Telerohr VS 0.0
Telescope pipe VS 0.0

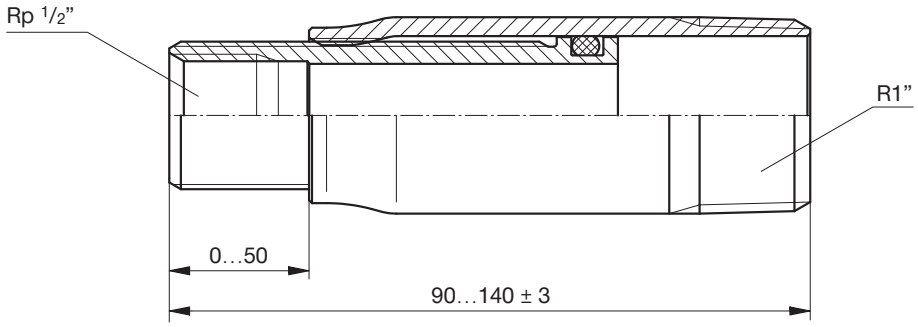

Telerohr VS 0.1
Telescope pipe VS 0.1

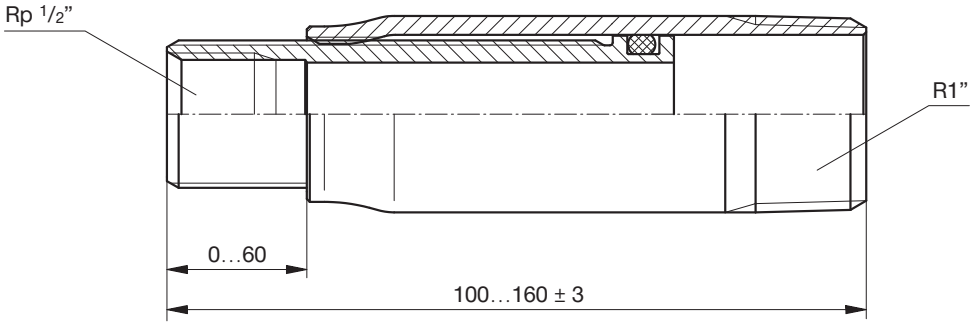

Telerohr VS 0.2
Telescope pipe VS 0.2

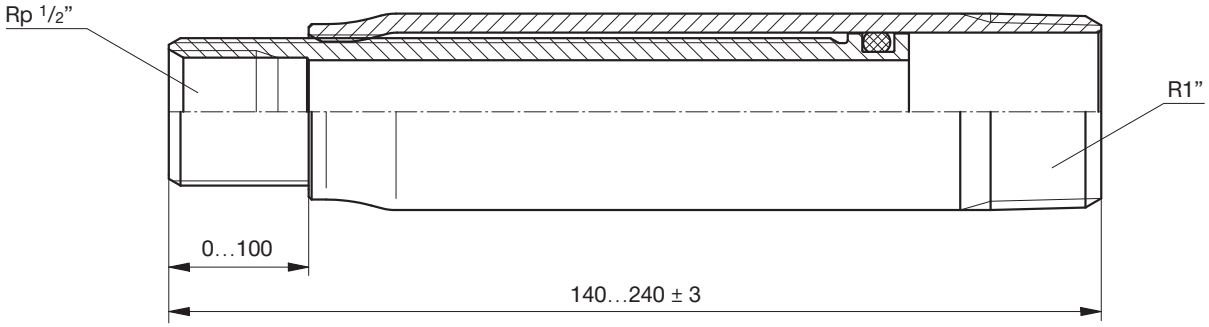

Telerohr VS 0.3/0.4
Telescope pipe VS 0.3/0.4

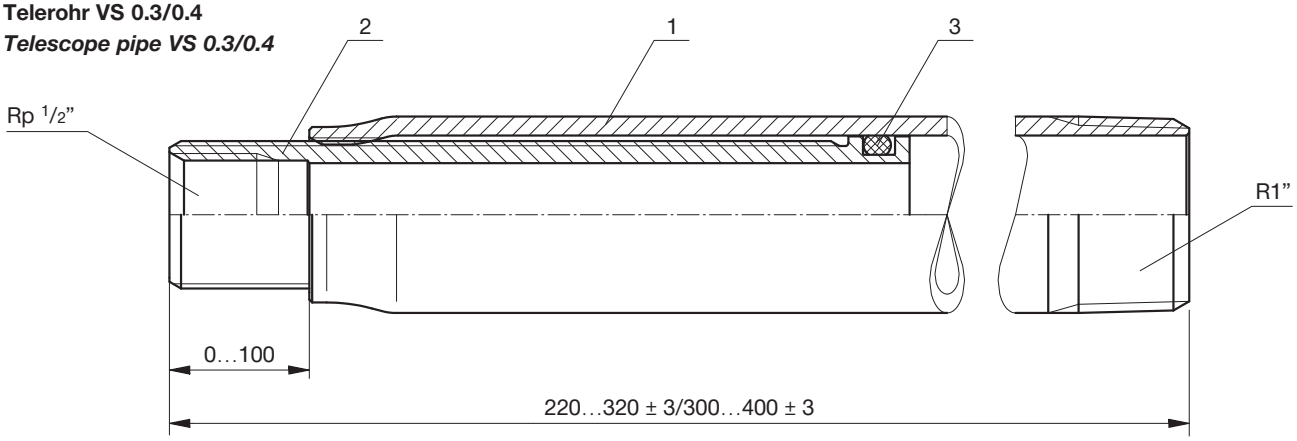

Telerohr VS (3/4”)

Telescope pipe VS (3/4”)

VIROTEC®-Telerohr nach Maß
Das VIROTEC®-Telerohr VS (3/4”) ist ein längenverstellbares Fallrohr für den Einsatz in ortsfesten Wasserlöschanlagen. Es ermöglicht die genaue Anpassung der Sprinklerköpfe an die Lage einer abgehängten Decke in vertikaler Richtung. Die Längenverstellung kann nach vollständiger Montage des Rohrnetzes erfolgen. Die Montagezeit wird erheblich verkürzt.

VIROTEC®-telescope pipe length tailor-made
The VIROTEC®-telescope pipe VS (3/4”) is an adjustable drop nipple for use in fixed, stationary water systems for extinguishing fires. It enables precise adjustment of the sprinkler heads to the location of a suspended ceiling in a vertical direction. The longitudinal adjustment can take place after the pipe network has been completely installed. The installation time is considerably reduced.

Montageanweisung
1. Einbaulänge ermitteln.
2. Gewinde eindichten und Bauteil montieren.
3. Länge einstellen, Verstellung erfolgt durch Schrauben (auch unter Druck möglich).

Mounting instruction
1. *Determine the installed length.*
2. *Seal the thread and fit the component.*
3. *Adjust length, adjustment made by screwing (also possible under pressure).*

Telerohr VS (3/4”)

Telescope pipe VS (3/4”)

Telerohr VS 0.1 (3/4”)
Telescope pipe VS 0.1 (3/4”)

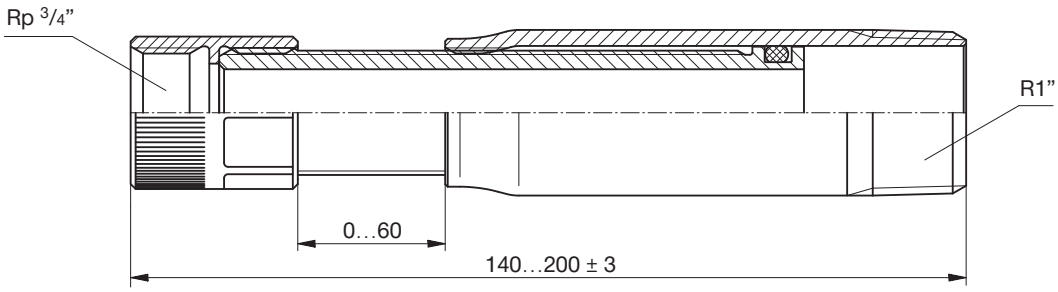

Telerohr VS 0.2 (3/4”)
Telescope pipe VS 0.2 (3/4”)

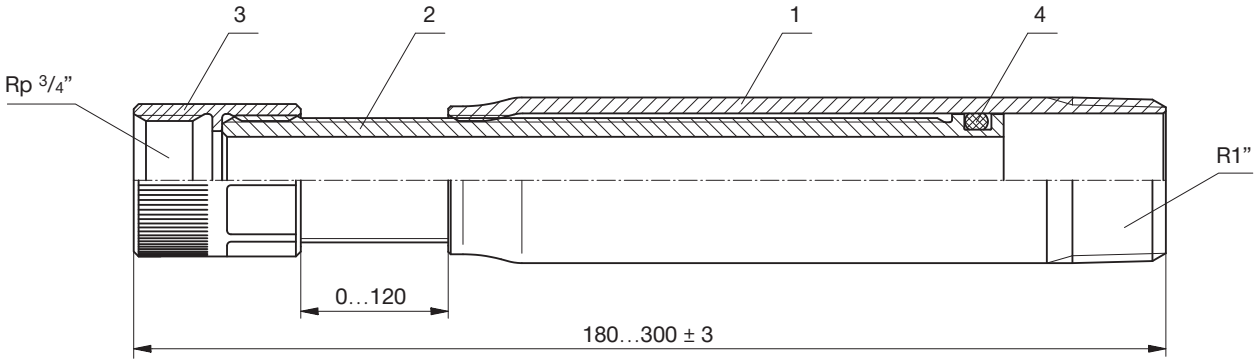

Telerohr VSI

Telescope pipe VSI

VIROTEC®-Telerohrlänge nach Maß
Das VIROTEC®-Telerohr VSI ist ein längenverstellbares Fallrohr für den Einsatz in ortsfesten Wasserlöschanlagen. Es ermöglicht die genaue Anpassung der Sprinklerköpfe an die Lage einer abgehängten Decke in vertikaler Richtung. Die Ausgangslänge kann, durch Verlängerung mit Doppelnippel, an die Einbausituation angepasst werden. Die Längenverstellung kann nach vollständiger Montage des Rohrnetzes erfolgen. Die Montagezeit wird erheblich verkürzt.

VIROTEC®-telescope pipe length tailor-made
The VIROTEC®-telescope pipe VSI is an adjustable drop nipple for use in fixed, stationary water systems for extinguishing fires. It enables precise adjustment of the sprinkler heads to the position of a suspended ceiling in a vertical direction. The initial length can be adjusted to the installed situation by lengthening the pre-fitted double nipple. The longitudinal adjustment can be carried out after the pipe network has been completely installed. The installation time is considerably reduced.

Montageanweisung
1. Einbaulänge ermitteln und Telerohr, wenn erforderlich, am 1” Doppelnippel verlängern.
2. Gegebenenfalls Verlängerung eindichten und Bauteil montieren.
3. Länge einstellen; Verstellung erfolgt durch Schrauben (auch unter Druck möglich).
   Achtung: Das Stellrohr darf nur bis zum Anfang des Außenrohres eingeschraubt werden!

Mounting instruction
1. *Determine the installed length and if necessary lengthen the tele pipe with a 1” double nipple.*
2. *If necessary seal the extension and fit the component.*
3. *Adjust length; adjust by screwing (even possible under pressure).*
   Important: *The adjusting pipe may only be screwed in up to the start of the connecting pipe!*

Funktion
Das VIROTEC®-Telerohr VSI besteht aus folgenden Bauteilen:

- Pos. 1 Außenrohr (KTL-beschichtet, schwarz)
- Pos. 2 Stellrohr (KTL-beschichtet, schwarz)
- Pos. 3 O-Ring (Silikon)

Function
The VIROTEC®-telescope pipe VSI is made up of the following components:

- *Item 1 Outer pipe (CED-coated, black)*
- *Item 2 Adjusting pipe (CED-coated, black)*
- *Item 3 O-ring (silicon)*

Telerohr VSI 0.1
Telescope pipe VSI 0.1

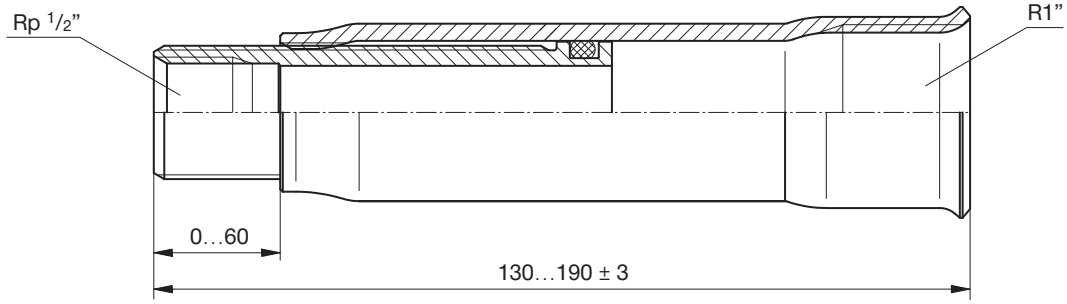

Telerohr VSI 0.2
Telescope pipe VSI 0.2

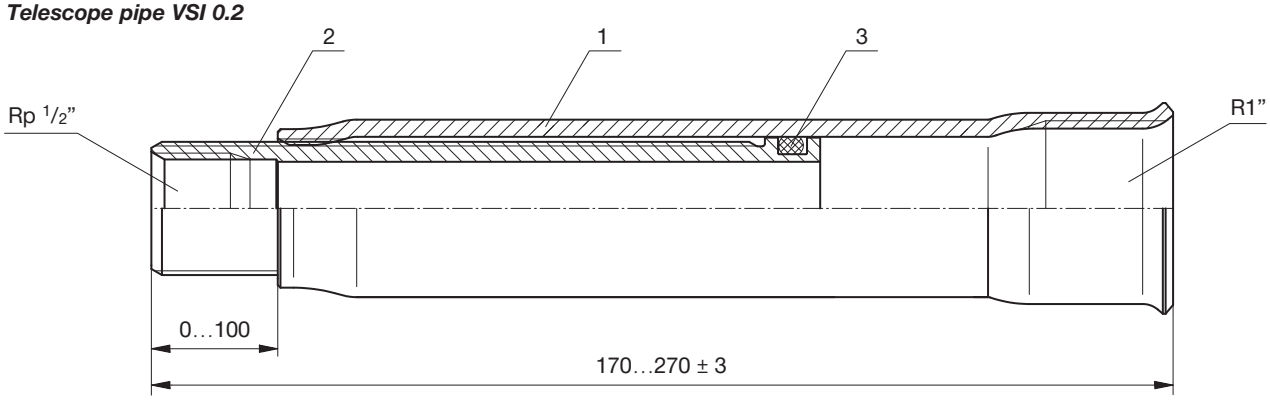

Telerohr VSN

Telescope pipe VSN

VIROTEC®-Telerohrlänge nach Maß
Das VIROTEC®-Telerohr VSN ist ein längenverstellbares Fallrohr für den Einsatz in ortsfesten Wasserlöschanlagen. Es ermöglicht die genaue Anpassung der Sprinklerköpfe an die Lage einer abgehängten Decke in vertikaler Richtung. Die Ausgangslänge kann, durch Kürzen des vormontierten Doppelnippels, an die Einbausituation angepasst werden. Die Längenverstellung kann nach vollständiger Montage des Rohrnetzes erfolgen. Die Montagezeit wird erheblich verkürzt.

VIROTEC®-telescope pipe lenght tailor-made
The VIROTEC®-telescope pipe VSN is an adjustable drop pipe for use in fixed, stationary water systems for extinguishing fires. It enables precise adjustment of the sprinkler heads to the position of a suspended ceiling in a vertical direction. The initial length can be adjusted to the installed situation by shortening the pre-fitted double nipple. The longitudinal adjustment can be carried out after the pipe network has been completely installed. The installation time is considerably reduced.

Montageanweisung
1. Einbaulänge ermitteln und Telerohr, wenn erforderlich, am 1” Doppelnippel kürzen.
2. Gegebenenfalls Außengewinde R1” schneiden.
3. Gewinde eindichten und Bauteil montieren.
4. Länge einstellen; Verstellung erfolgt durch Schrauben (auch unter Druck möglich).
   Achtung: Das Stellrohr darf nur bis zum Anfang des Außenrohres eingeschraubt werden!

Mounting instruction
1. *Determine the installed length and if necessary shorten the tele pipe at the 1” double nipple.*
2. *If necessary, cut the outer thread R1”.*
3. *Seal the thread and fit the component.*
4. *Adjust the length; adjust by screwing (possible even under pressure).*
   Important: *The adjusting pipe may only be screwed in up to the start of the outer pipe!*

Telerohr VSN 0.5/1.0
Telescope pipe VSN 0.5/1.0

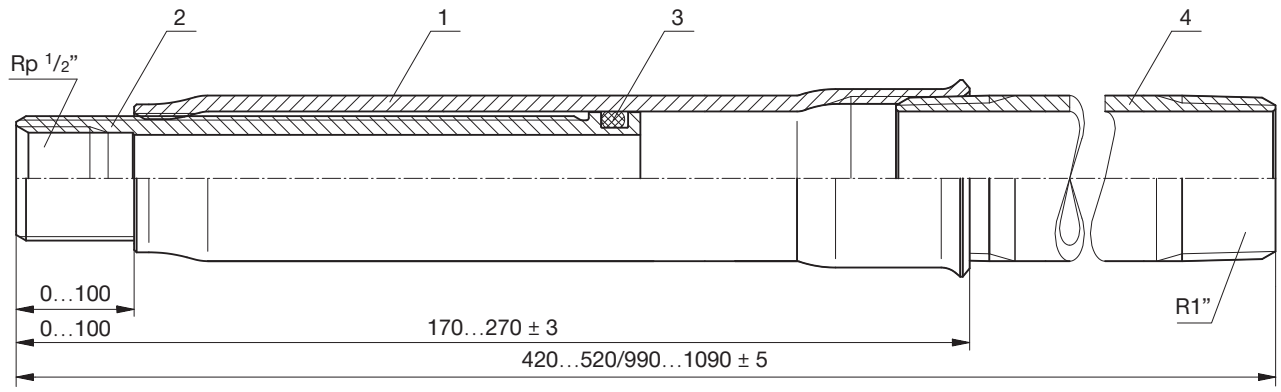

Ai raccordi flessibili è consentito una certo grado di deformazione, che non deve superare le specifiche massime di Profit Europe NV.

A fixed deflection degree is allowed for flexible couplings, but can not be beyond the maximum specifications of Profit Europe NV.

Diametro nominale mm Nominal diameter mm	Diametro esterno mm Outside diameter mm	Grado di deformazione Deflection degree
32	42,4	2,3
40	48,3	2,3
50	60,3	2,3
65	76,1	1,9
80	88,9	1,6
100	114,3	1,6
125	139,7	1,3
150	168,3	1,1
200	219,1	0,8
250	273,0	0,7

Specifiche della tubazione

Sul tubo sono presenti scanalature a rullo o di taglio, corrispondenti ai raccordi e ai giunti. Il diametro esterno deve rimanere disponibile per la futura manutenzione. Verificare che il diametro della scanalatura si mantenga all'interno della tolleranza standard. Le dimensioni delle scanalature sono elencate alla pagina successiva.

Specifications of the pipe

Rolling or cutting groove is allowed for the pipe corresponding to the fittings and couplings. The outer diameter must be suitable for the intended service. Make sure the size of the groove is within the scope of the standard tolerance. Groove sizes are stated on the next page.

Profit Europe NV • Industrielaan 20 • 9320 Erembodegem • Belgium • Tel: 0032/53 64 60 80 • Fax: 0032/53 64 60 86 • info@profittings.eu

Tabella A: specifiche della scanalatura a rullo

Table A: Roll Groove specifications

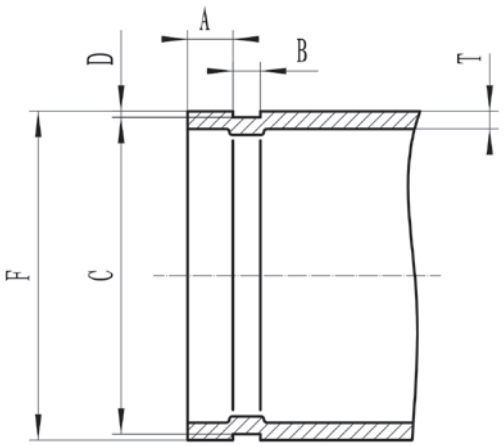

Dimensione tubo nominale Nominal Pipe size	Diametro esterno Outside diameter			Sede guarnizione Gasket seat	Larghezza guarnizione Groove width	Diametro guarnizione Groove diameter		Profondità guarnizione* Groove depth*	Spessore minimo Minimum thickness	Diametro massimo Max. diameter
				A	B	C		D	T	F
NPS (DN)	Dimensione Size mm	+ mm	- mm	+/- 0,76 mm	+/- 0,76 mm	Dimensione Size	mm	mm	mm	mm
1 (25)	33,7	0,41	0,68	15,88	7,14	30,20	-0,38	1,60	2,77	34,5
1¼ (32)	42,4	0,50	0,60	15,88	7,14	38,99	- 0,38	1,60	2,77	43,3
1½ (40)	48,3	0,44	0,52	15,88	7,14	45,09	- 0,38	1,60	2,77	49,4
2 (50)	60,3	0,61	0,61	15,88	8,74	57,15	- 0,37	1,60	2,77	62,2
2½ (65)	76,1	0,76	0,76	15,88	8,74	72,26	- 0,46	1,98	3,05	77,7
3 (80)	88,9	0,89	0,79	15,88	8,74	84,94	- 0,46	1,98	3,05	90,6
4 (100)	114,3	1,14	0,79	15,88	8,74	110,08	- 0,51	2,11	3,05	116,2
5 (125)	139,7	1,40	0,79	15,88	8,74	135,48	- 0,51	2,11	3,40	141,7
6 (150)	168,3	1,60	0,79	15,88	8,74	163,96	- 0,56	2,16	3,40	170,7
8 (200)	219,1	1,60	0,79	19,05	11,91	214,40	- 0,64	2,39	4,77	221,5
10 (250)	273,0	1,60	0,79	19,05	11,91	268,28	- 0,69	2,39	4,77	275,4

* La profondità scanalatura "D" si usa solo come dimensione di riferimento. Il diametro scanalatura "C" deve essere mantenuto.

* Groove Depth 'D' is only a reference dimension. Groove diameter 'C' must be maintained.

Installazione di raccordi

1. Controllare l'estremità del tubo, dopo la scanalatura, per verificare che non ci siano ammaccature, fori o perdite di rivestimento. Ripristinate tutto prima, per evitare perdite.

2. Svitare il raccordo preassemblato, con un avvitatore.

3. Applicare un lubrificante neutro sul labbro di tenuta della guarnizione. Lubrificare anche la parte interna dell'alloggiamento

4. Far scorre la guarnizione oltre la fine del tubo e verificare che copra completamente l'estremità.

5. Avvicinare le estremità dei due tubi e spingere la guarnizione oltre la fine del tubo. Verificare che la guarnizione si trovi nel mezzo e che copra entrambe le estremità dei tubi.

6. Il diametro esterno dell'alloggiamento e il diametro della guarnizione devono corrispondere alle specifiche fornita da Profit. Fare riferimento alla pagina con le specifiche delle guarnizioni (pag. 46)

7. Appoggiare un alloggiamento sulla guarnizione. Dopo averlo posto sulla guarnizione, controllare che l'alloggiamento si sia inserito nella scanalatura.

8. Inserire un bullone nell'alloggiamento. Verificare che la testa del bullone sia inserita perfettamente nell'alloggiamento.

9. Poggiare il secondo alloggiamento sul bullone e avvitare a mano il dado sul bullone. Poi inserire il secondo bullone e stringerlo a mano.

10. Stringere alternativamente entrambi i bulloni con un avvitatore o con una chiave a tubo, fino a chiudere completamente il raccordo. Per stringere i bulloni alla coppia specificata si potrebbe usare una chiave dinamometrica. L'applicazione di una coppia superiore non migliora la tenuta e potrebbe danneggiare il raccordo.

NOTA: per la corretta tenuta si devono rispettare i valori di coppia standard. Una coppia troppo grande non fa migliorare le proprietà di tenuta. Al contrario, danneggerà i bulloni e l'alloggiamento e provoca anche disinnesti. Un coppia troppo piccola causerà delle perdite. I disinnesti e le perdite potrebbero causare lesioni o danni. (Vedere pagina 45)

Profit Europe NV • Industrielaan 20 • 9320 Erembodegem • Belgium • Tel: 0032/53 64 60 80 • Fax: 0032/53 64 60 86 • info@profittings.eu

Installation of couplings

1. Check the end of the pipe, after the groove, to make sure that there are no bumps, holes or loose coating particles. Remove these first, in order to prevent leaks.

2. Unscrew the pre-assembled coupling using an impact wrench.

3. Apply a neutral lubricant onto the sealing lips of the gasket. Also apply lubricant to the interior side of the housings

4. Slide the gasket over the end of the pipe and make sure that it covers the end completely.

5. Bring the two pipe ends together and push the gasket over the end of the pipe. Make sure that the gasket is in the middle and that it covers both pipe ends.

6. The outer diameter of the housing and the groove diameter must match the specifications provided by Profit; please review the page with groove specifications (see page 46).

7. Place one housing around the gasket. Once it is placed over the gasket, you shall see that the housing fits in the groove.

8. Stick a bolt through the housing. Make sure that the head of the bolt perfectly fits in the housing.

9. Place the second housing over the bolt and turn the nut finger-tight on the bolt. Then place the second bolt and tighten it finger-tight.

10. Tighten both bolts alternately using an impact wrench with a suitable socket wrench until the coupling is completely closed. You can optionally tighten the bolts to the specified torque using a torque wrench. Applying a higher torque will not improve the sealing and can damage the coupling.

NOTE: For proper sealing, torque standards must be respected. A torque too big cannot improve the sealing property of the coupling, on the contrary, it will damage the bolts and housing, even cause disconnections. A torque too small will lead to leakage. Both disconnections and leakage may cause injuries or loss. (See page 45)

Installazione di staffe meccaniche a T

1. Controllare le dimensioni appropriate del foro e scegliere la sega a tazza più adatta (data sheet sul nostro sito web). Accertarsi che il cordone della saldatura del tubo sia posto sul fondo.

2. Dopo la foratura, ripulire le sbavature, sia dentro che fuori il foro.

3. Asportare le irregolarità e i residui con un magnete flessibile.

4. Svitare i dadi della staffa meccanica a T preassemblata.

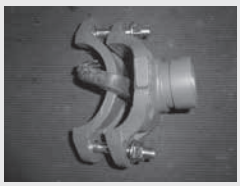

5. Lubrificare la guarnizione con del lubrificante neutro.

6. Posizionare l'alloggiamento superiore sul foro praticato.

7. Appoggiare la parte inferiore dell'alloggiamento attorno al tubo. Avvitare a mano il primo dado e poi il secondo.

8. Stringere alternativamente entrambi i bulloni con un avvitatore (con la punta adatta) fino a fissarli saldamente. Per stringere i bulloni alla coppia specificata utilizzare una chiave dinamometrica. L'applicazione di una coppia superiore non migliora la tenuta e potrebbe danneggiare il pezzo. Verificare che la staffa meccanica a T installata sia in piano.

NOTA: per la corretta tenuta si devono rispettare i valori di coppia standard. Una coppia troppo grande non fa migliorare le proprietà di tenuta. Al contrario, danneggerà i bulloni e l'alloggiamento e provoca anche disinnesti. Un coppia troppo piccola causerà delle perdite. I disinnesti e le perdite potrebbero causare lesioni o danni. (Vedere pagina 45)

Profit Europe NV • Industrielaan 20 • 9320 Erembodegem • Belgium • Tel: 0032/53 64 60 80 • Fax: 0032/53 64 60 86 • info@profittings.eu

Installation of mechanical tees

1. Check the appropriate hole- cut dimension and select the correct hole saw (see datasheet on our website). Make sure that the welded seam of the pipe is located at the bottom.

2. After drilling the hole, clean off the burrs from the drilled hole, both inside and outside the borehole.

3. Remove the irregularities and the remains with a flexible magnet.

4. Unscrew the nuts out of the preassembled mechanical tee.

5. Lubricate the gasket with a neutral lubricant.

6. Position the upper housing over the drilled hole.

7. Place the bottom part of the housing around the pipe.
Screw the first nut hand tight, and then the second.

8. Tighten both nuts alternately with an impact wrench (with the appropriate cap) until they are firmly attached. You can then tighten the bolts to the specified torque using a torque wrench. (Applying a higher torque will not improve the sealing and may damage the piece). Check that the installed mechanical tee is level.

NOTE: For proper sealing, torque standards must be respected. A torque too big cannot improve the sealing property of the coupling, on the contrary, it will damage the bolts and housing, even cause disconnections. A torque too small will lead to leakage. Both disconnections and leakage may cause injuries or loss. (See page 45)